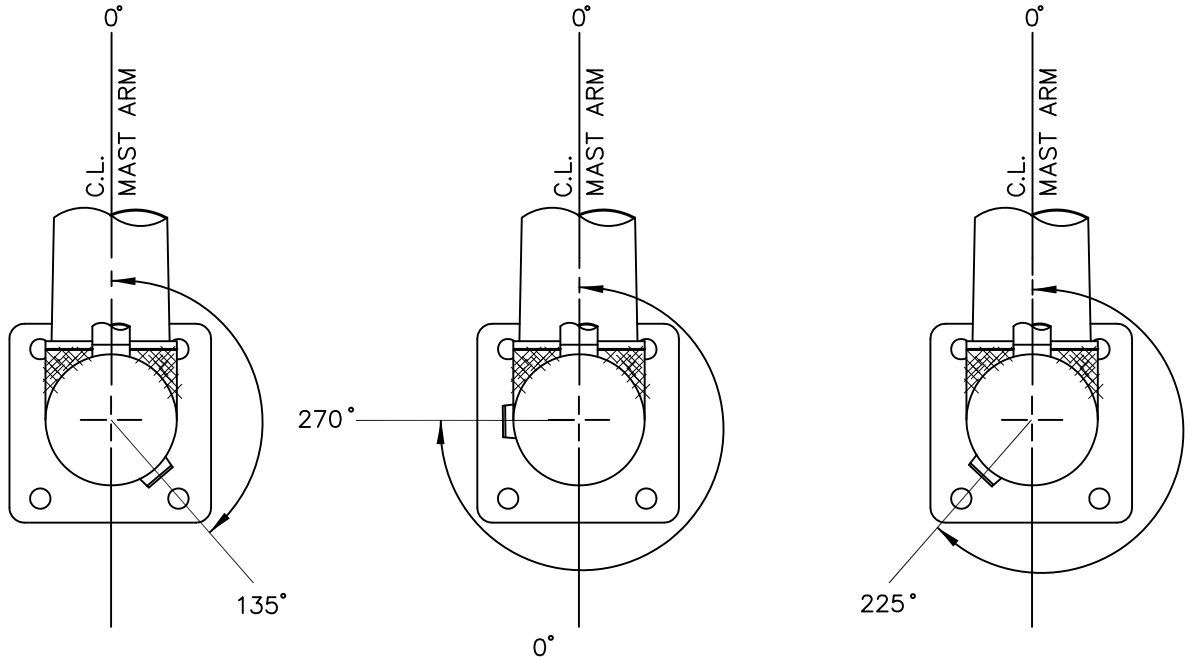


NOTE:
ALL HOLES TO BE FIELD DRILLED.

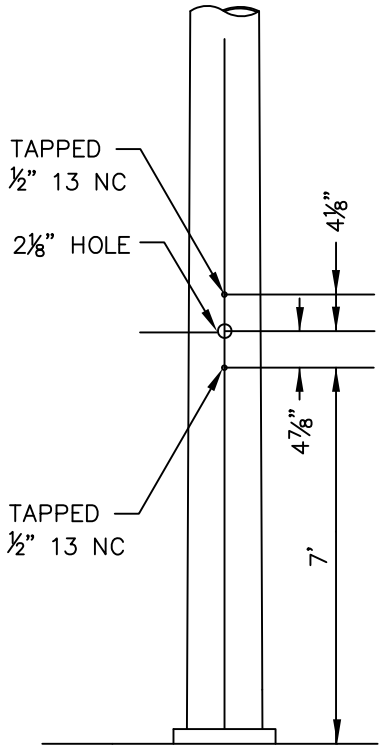


TYPE VII MOUNT FOR PEDESTRIAN HEAD MOUNT

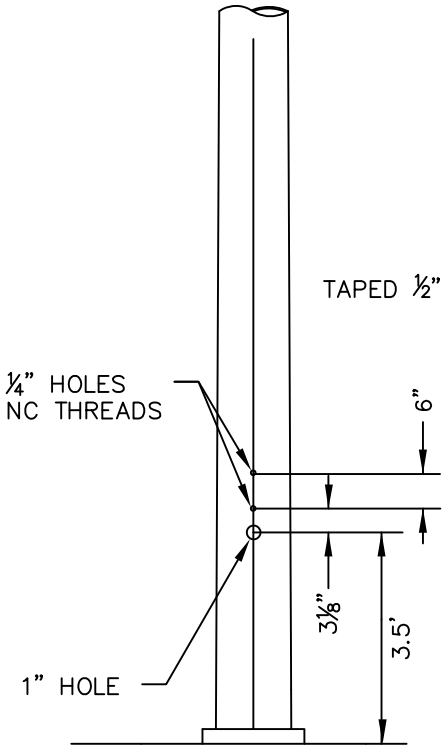


TYPE II PEDESTRIAN PUSH BUTTON MOUNT

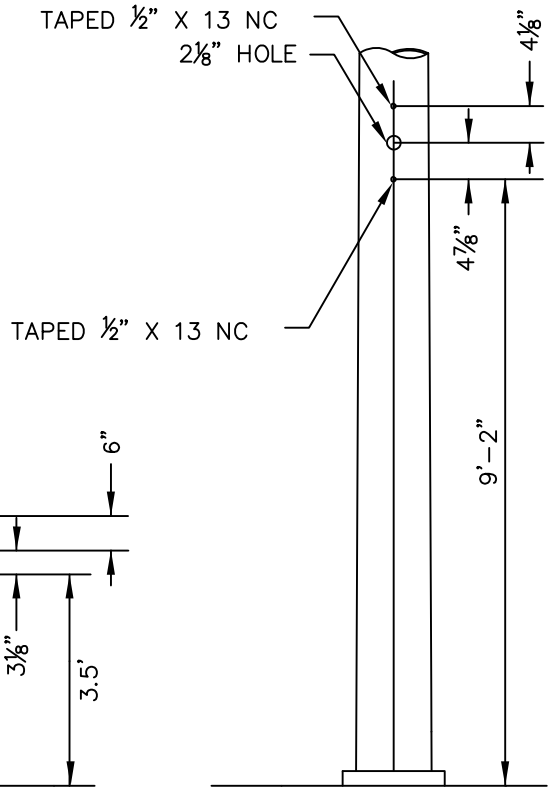


TYPE V MOUNT FOR TYPE F AND Q SIGNAL HEADS

| | | | |
|---|---|---|---|
| SIGNATURES ON FILE | GLENDALE | CITY OF GLENDALE<br>TRAFFIC SIGNAL AND ITS STANDARDS<br>SIGNAL POLE DRILLING DETAILS | REVISION:<br>4/2013<br>T5-8 |